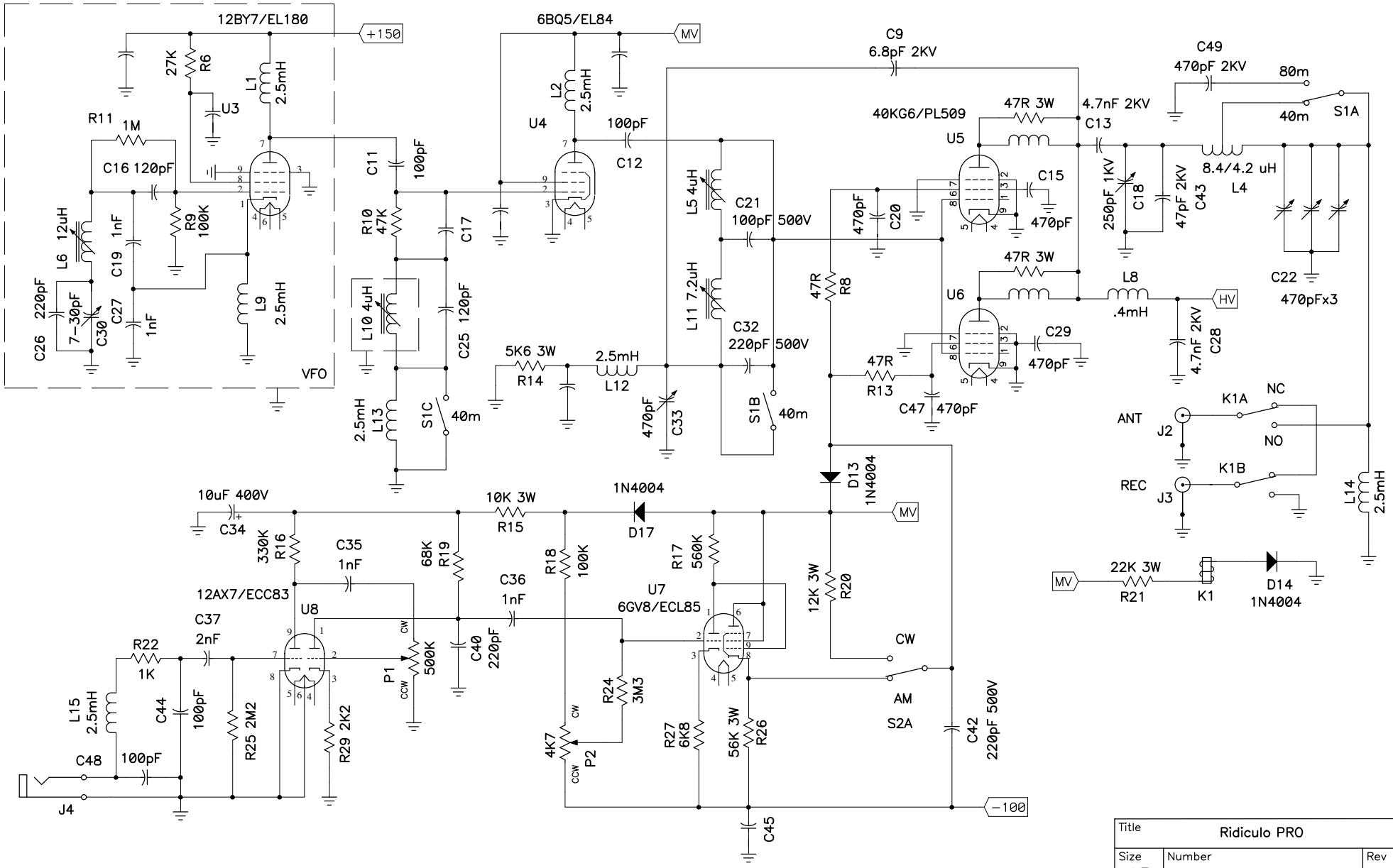

Title	Ridiculo PRO	
Size A3	Number	Rev
Date		Drawn by
Filename		Sheet 1 of 2